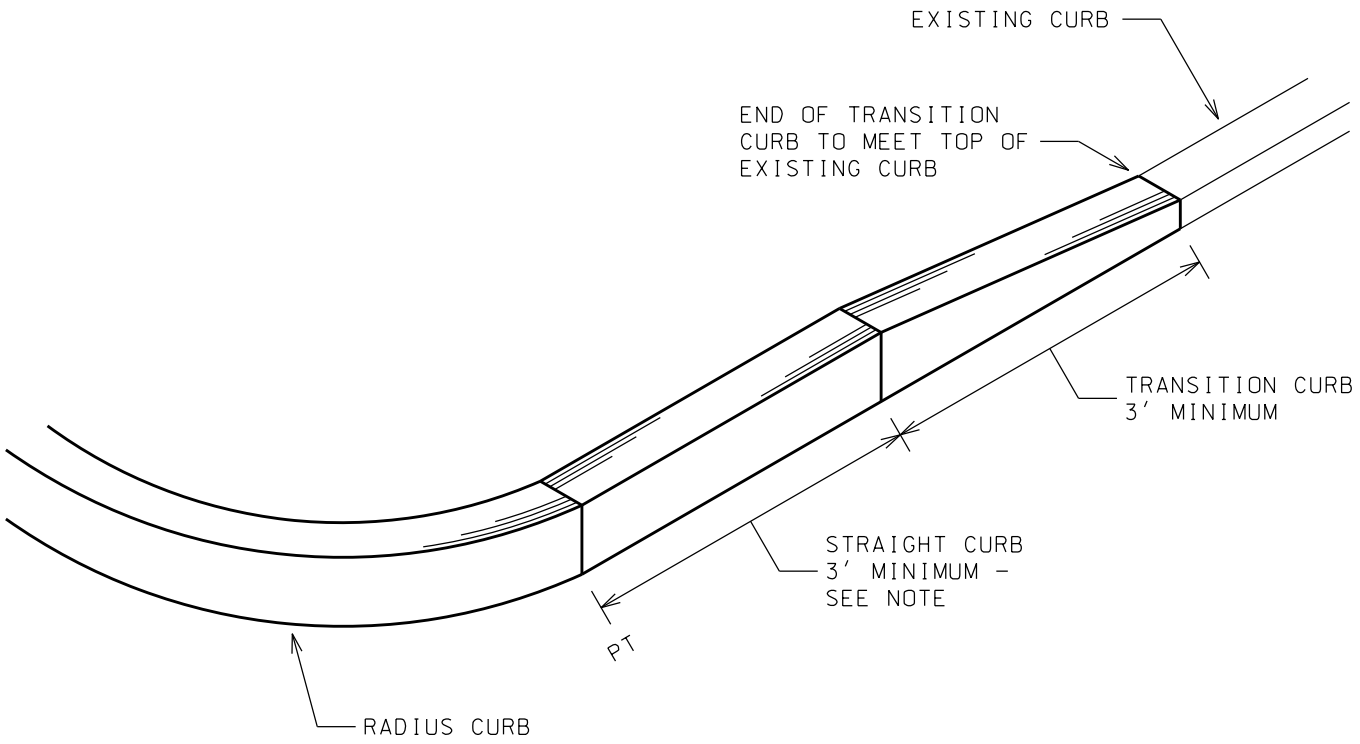

NOTE:

LENGTH OF STRAIGHT CURB WILL BE AS REQUIRED IN CONTRACT DOCUMENTS, WITH 3 FEET MINIMUM.

CITY OF ROCHESTER

NEW CURB TRANSITION TO EXISTING CURB

ISSUED	9-2-91	STANDARD DWG.NO.R609-7
REVISED	12-30-11	