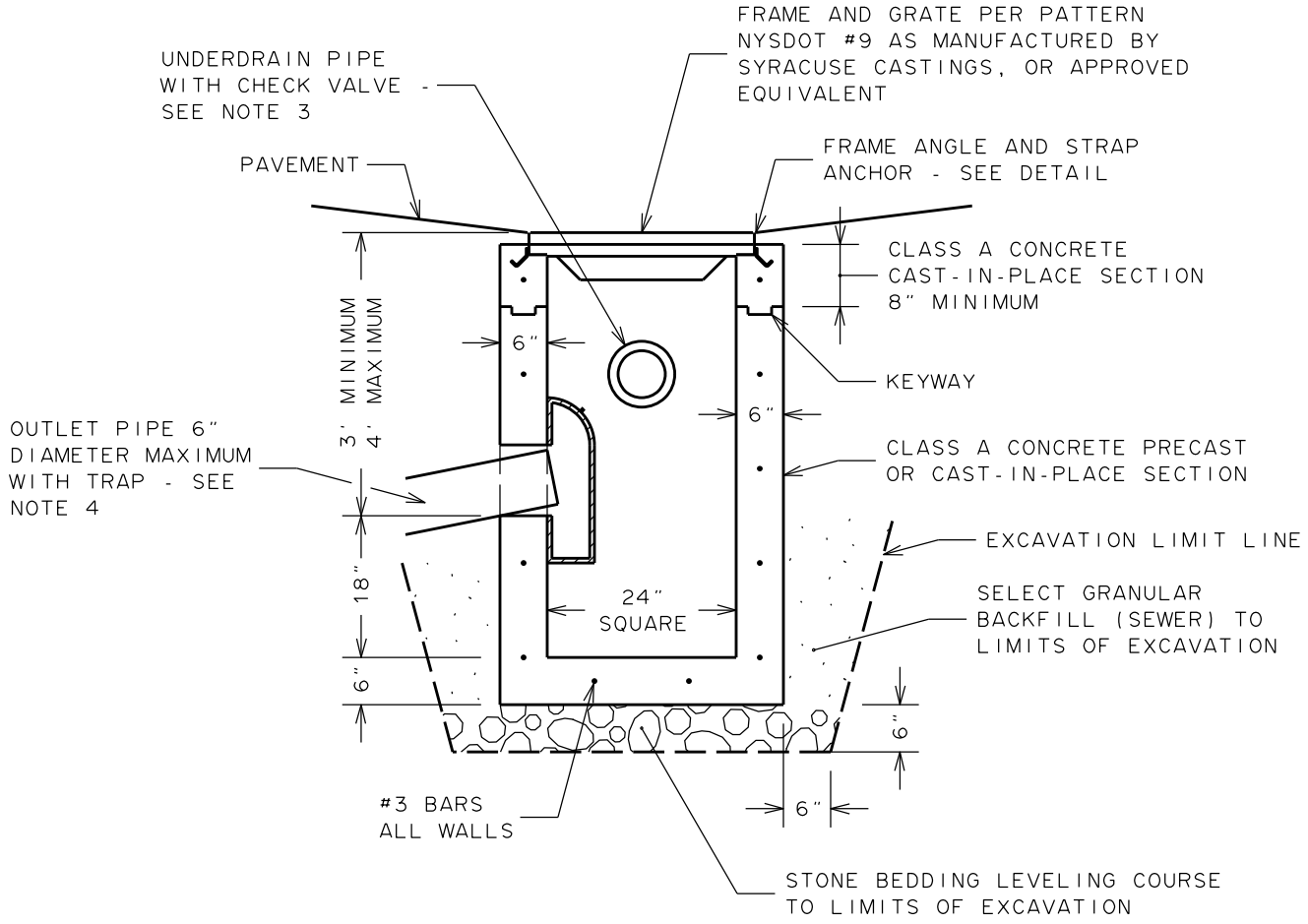

PLAN

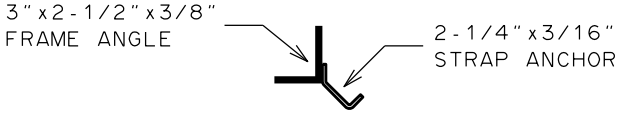

ANCHOR DETAIL

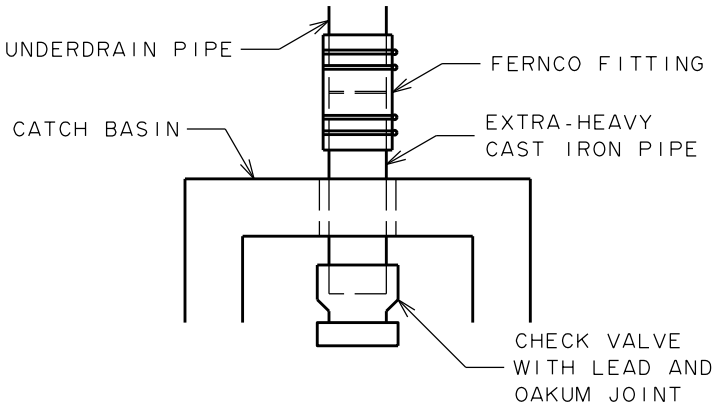

CHECK VALVE CONNECTION

NOTES:

1. COAT INTERIOR OF CATCH BASIN WITH 2 COATS OF TAMMS DURALKOTE 240, OR APPROVED EQUIVALENT.
2. COAT EXTERIOR OF CATCH BASIN WITH 2 COATS OF HI-BUILD BITUMINOUS COATING 35-J-10, KOPPERS BITMASTIC SUPER SERVICE BLACK, OR APPROVED EQUIVALENT.
3. INSTALL CHECK VALVE TO PREVENT WATER FROM FLOWING BACK INTO UNDERDRAIN PIPE.
4. CATCH BASIN TRAP TO BE PER NEENAH R-3701-8, OR TEE WYE WITH THREADED CLEAN-OUT PLUG ON TOP SIDE.

CITY OF ROCHESTER

CATCH BASIN TYPE C

ISSUED	9-2-91	STD. DWG.
REVISED	9-19-11	NO. R604-2